Tripoli Rocketry Association Level 3 Certification Attempt

Kevin O'Classen
1101 Dutton Brook Road
Goshen, VT 05733
(802) 247-4205
kevin@back2bed.com

Doctor Fill

“Doctor Fill”

General Specifications

Airframe: 7.5” x 133”
Weight empty: 40.4 pounds
Weight Ready to Fly: 57.9 pounds
Launcher: Unistrut

Motor: Contrail M2281 hybrid
Predicted Altitude: 5100’
Predicted Max Velocity: 620 fps
Max Acceleration : 23.5G

Airframe is constructed of fiberglassed 7.5” LOC phenolic tubing. I cannot specify the fiberglass component as I bought this tubing already fiberglassed from Ken Allen of Performance Hobbies. Couplers are 16” Red Arrow Phlexible Phenolic covered with two layers of 2oz glass. Fins are 1/2” thick aircraft plywood, laminated from two sheets of 1/4” 5-ply. Nose cone is 5:1 Ogive by Performance Hobbies.

The **motor system** for this flight will be a Contrail M2281 hybrid. The motor is 75mm x 60”, and weighs 17.5 pounds fully loaded. This motor is supported in a 36” motor mount, with positive motor retention accomplished at the fore end of the motor. The motor mount is constructed of 75mm PML phenolic tubing, with an aluminum reinforcement at the aft end of the tube. This reinforcement seats against the aft centering ring, and assures transmission of force from the motor to the airframe.

The 1/2” thick **fins** are attached to the motor mount with epoxy and two layers of 9oz fiberglass cloth. The motor tube is secured in the airframe by use of three centering rings, two of which are 1/2” thick, and one is 1” thick because it serves as the main recovery attachment point.

Two **flight computers** are used, each contained in it’s own bay. A G-Wiz MC will serve as the main flight computer, and an ARTS2 will ride as the secondary computer. A MissileWorks RRC2 mini has also been prepared and is available if needed to replace either of the other computers.

The **recovery chain** is fairly standard for a dual-deploy system. The main recovery risers are constructed of 5/8” Tubular Kevlar, At apogee a 54” drogue chute will be deployed, and at altitude a Rocketman R18 chute will deploy. The predicted rate of descent on the main chute is ~14 fps. The nose cone will be recovered separately, and its’ chute will serve to pull the deployment bag off the main chute. The nose cone weighs 7.2 pounds and will recover on a 60” square chute.

ADHESIVES

A number of adhesives were used in the construction of this rocket.

Bob Smith 30 Minute Epoxy - was used as the general construction adhesive in small phenolic to phenolic and wood to phenolic joints. For large joints West System was used.

BSF Gap Filling "Insta Cure" CA - Used as a permanent thread lock.

Elmer's Pro-Bond Aliphatic Interior-Exterior Glue was used to laminate sheets of 1/4" 5-ply aircraft plywood to form fin stock 1/2" thick. It was also used to join two 7.5" x 1/2" centering rings to form a 1" thick centering ring to serve as the booster section's recovery attachment point. It was further used in the placement of several rails and runners in the motor mount. In short, any wood-to-wood face joint was made with the glue.

J-B Weld Waterweld is a putty-style epoxy stick. This was used to form part of the deployment charge containers, to cover and lock threads permanently in place, and in several other filling operations where high strength and quick set times are required.

J-B Weld Standard - was used to retain the aluminum thrust collar and the lower rail button attachment. It was also used to secure the 1/2" threaded rod and eye nuts that run through the electronics coupler, and securing threaded aluminum attachment points for altimeter bay covers.

West System 105 + 206 (Slow) Hardener Epoxy System - was used in all of the fiberglass lamination of the motor mount/fin root joints. It was also used in laminating the coupler tubes, and coating wooden bulkhead surfaces exposed to deployment charge gases, as a protective layer. It was also used to form the fin filets.

Doctor Fill
Length: 133.0000 In. , Diameter: 7.7500 In. , Span diameter: 25.7500 In.
Mass 40.650015 Lb. , Selected stage mass 40.650015 Lb. (User specified)
CG: 81.5000 In., CP: 99.8083 In., Margin: 2.38
Shown without engines.

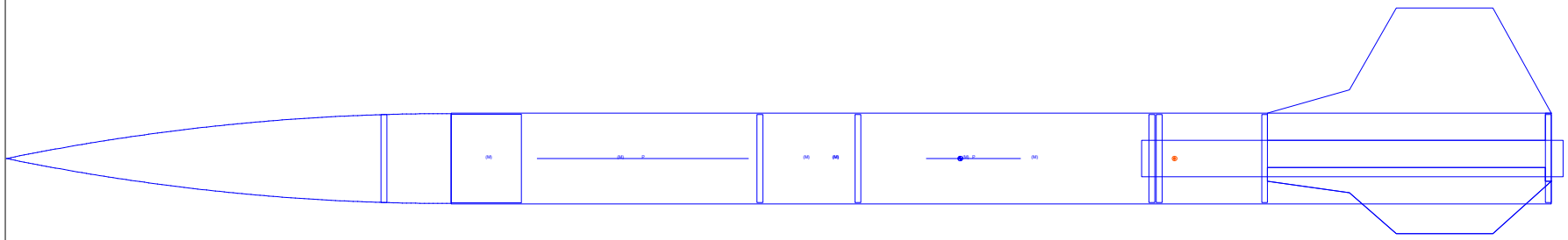

Doctor Fill
Length: 133.0000 In. , Diameter: 7.7500 In. , Span diameter: 25.7500 In.
Mass 58.099521 Lb. , Selected stage mass 58.099521 Lb. (User specified)
CG: 88.4867 In., CP: 99.8083 In., Margin: 1.47
Engines: [M2281-None,]

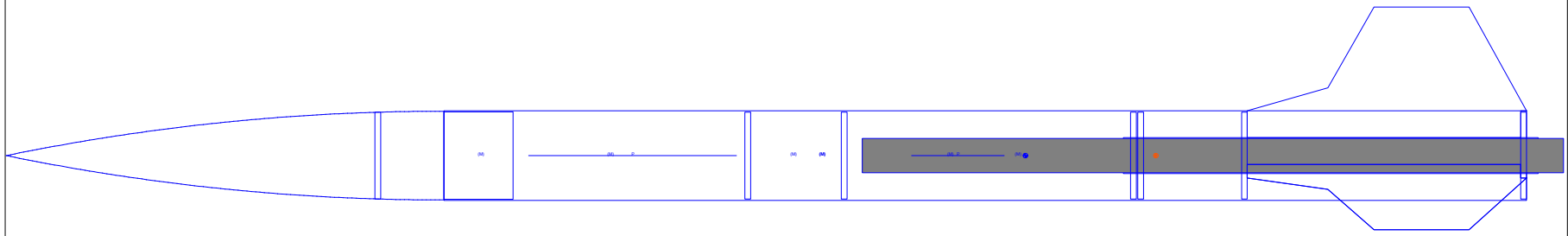

Doctor Fill - Motor Mount and Retention

The Contrail 75mm motor system used in this rocket offers several challenges.

The motor's potential performance is an issue. While rated as a 7% M2281, this motor, like all hybrids, has a highly regressive thrust curve, and the average thrust figures should be considered as conservative. For example, during the first second of burn the peak thrust exceeds 6000 newtons, and the motor delivers a thrust profile equivalent to an 1% M5100.

Next, the motor is 60" long, and weighs 11.5 pounds empty. Further, the aft end of the motor is belled to a diameter significantly larger than 75mm, precluding the used of many commercial retainers such as Aeropac, or the Slimline screw-in. The manufacturer specifically states that Slimline snap-ring retainers should not be used since they will not stand up to the weight of the motor during deployment. Fortunately, the motor is fully prepared for retention from the fore end.

The CG of the motor itself shifts aft 6.2 inches during the course of the burn. This results in a shift of 2.26 inches in the rocket's CG during the course of the flight. This shift still leaves the rocket with a stability margin of 1.28 calibers at the worst point in it's flight.

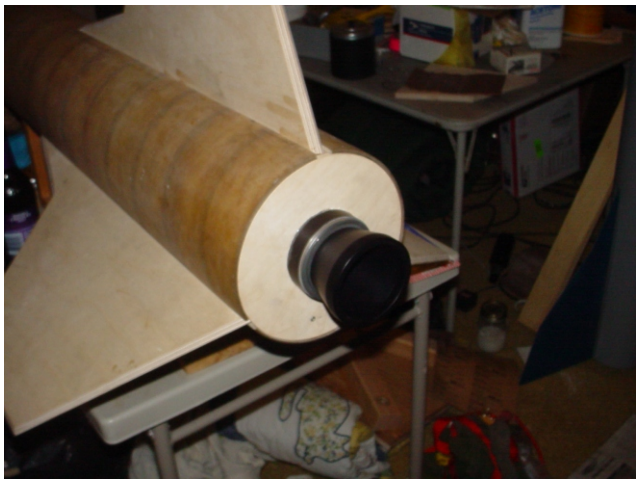

The aft end of the rocket, with the motor system in place. Note that the belled end of the nozzle is significantly larger than the motor's diameter, precluding use of many commercial retainers

The motor mount / fincan assembly under construction. The fin roots are epoxied to the motor tube, then reinforced with two layers of 9oz fiberglass cloth. The fore centering ring, which serves as the main recovery attachment point, is double the thickness of 'standard' rings.

The aft end of the motor mount, showing the cut-down Slimline retainer that serves to mechanically transmit thrust from the motor directly to the aft centering ring, rather than relying solely on phenolic and adhesives. The ring abuts the aft centering ring, which rests tight against the aft edge of the fin root. All of the tubing aft of the fore centering ring has been fiberglassed.

The fore end of the motor mount, showing the Kevlar plus CF reinforcement for the motor retention system, and the recovery harness attachment points.

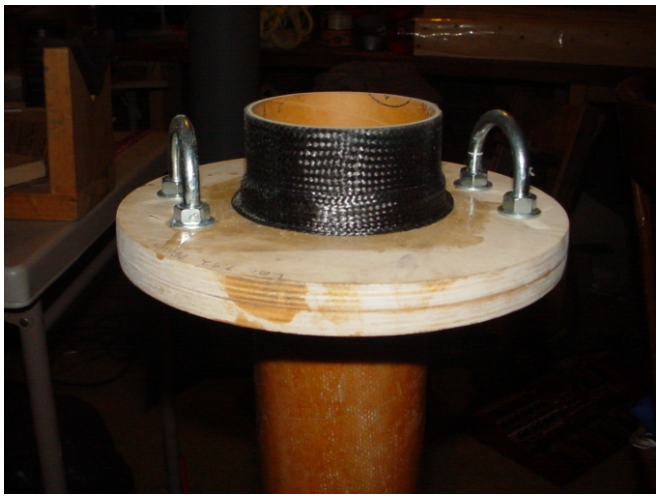

Below is the MMT extension which bolts to the front of the motor and provides positive retention.

The complete motor mount assembly, with the motor case installed and retained. The bolts are 5/16" x 2", the plywood bulkhead is one inch thick.

Doctor Fill - Electronics Bay and Avionics

The two altimeters in this rocket are fully redundant, sharing no components or connections. Each is mounted on a plywood sled which holds the altimeter, the two batteries, and a Molex connector.

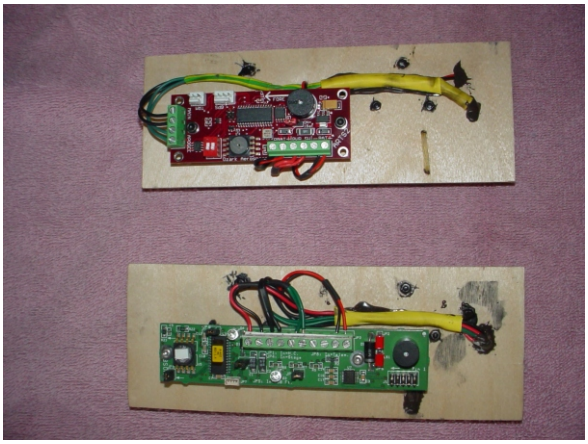

The rocket's Molex connector is attached to the sled, and the sled inserted into the altimeter bay. The wiring is identical in each bay, making it impossible to put the altimeter in the 'wrong' place.

The altimeter fully inserted in the bay. The cover contains a pad which locks the board in place. The intent with this design was to keep wire runs as short and as fully supported as possible, as well as providing a 'straight through' attachment for the recovery harness.

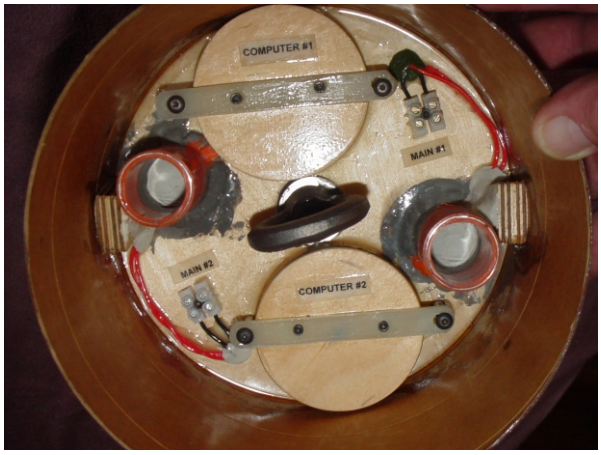

The altimeter bay with covers installed. The plywood blocks behind the charge holders mount and protect the power switches for the altimeters.

Doctor Fill Avionics Schematic

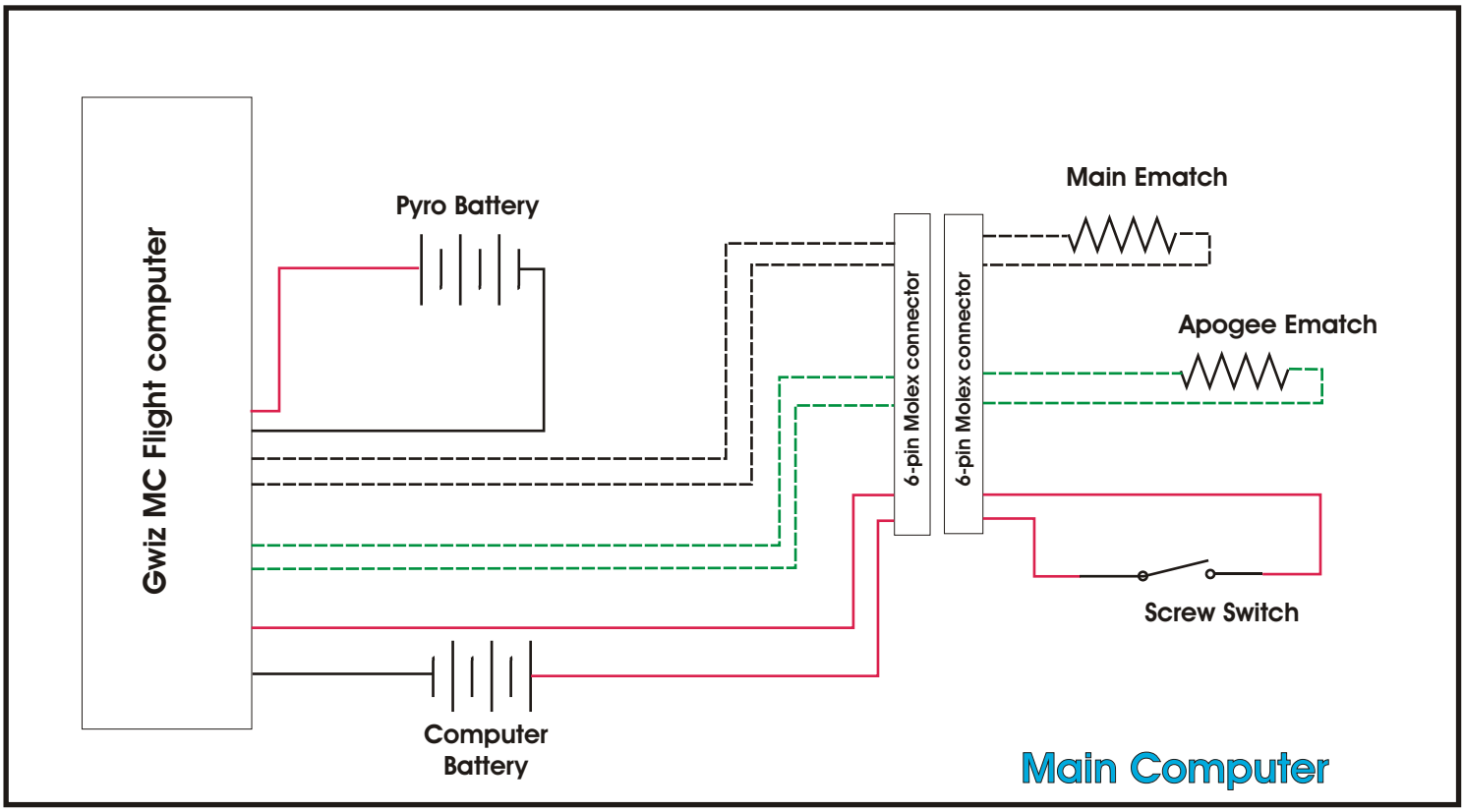

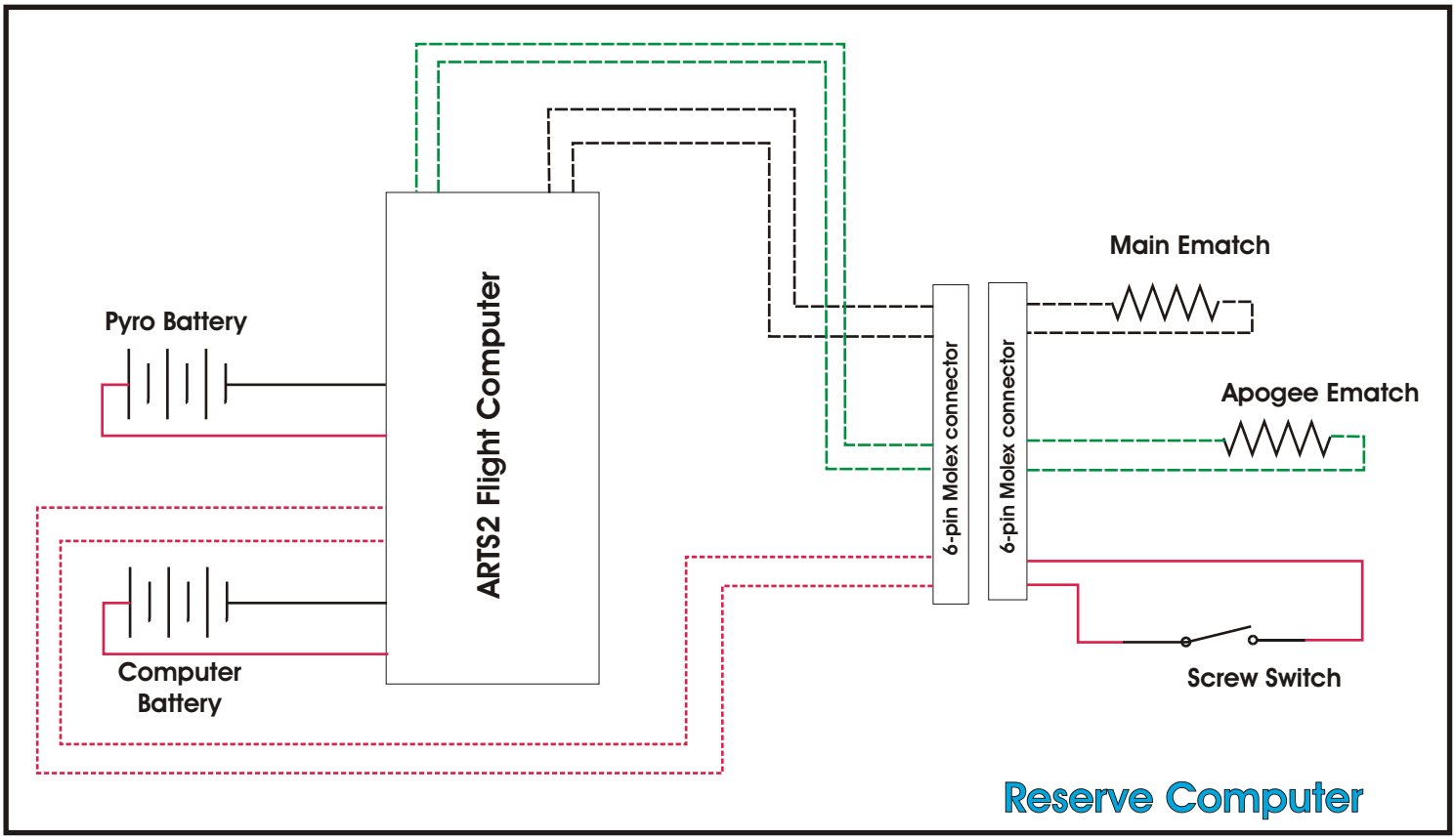

Doctor Fill Avionics Schematic

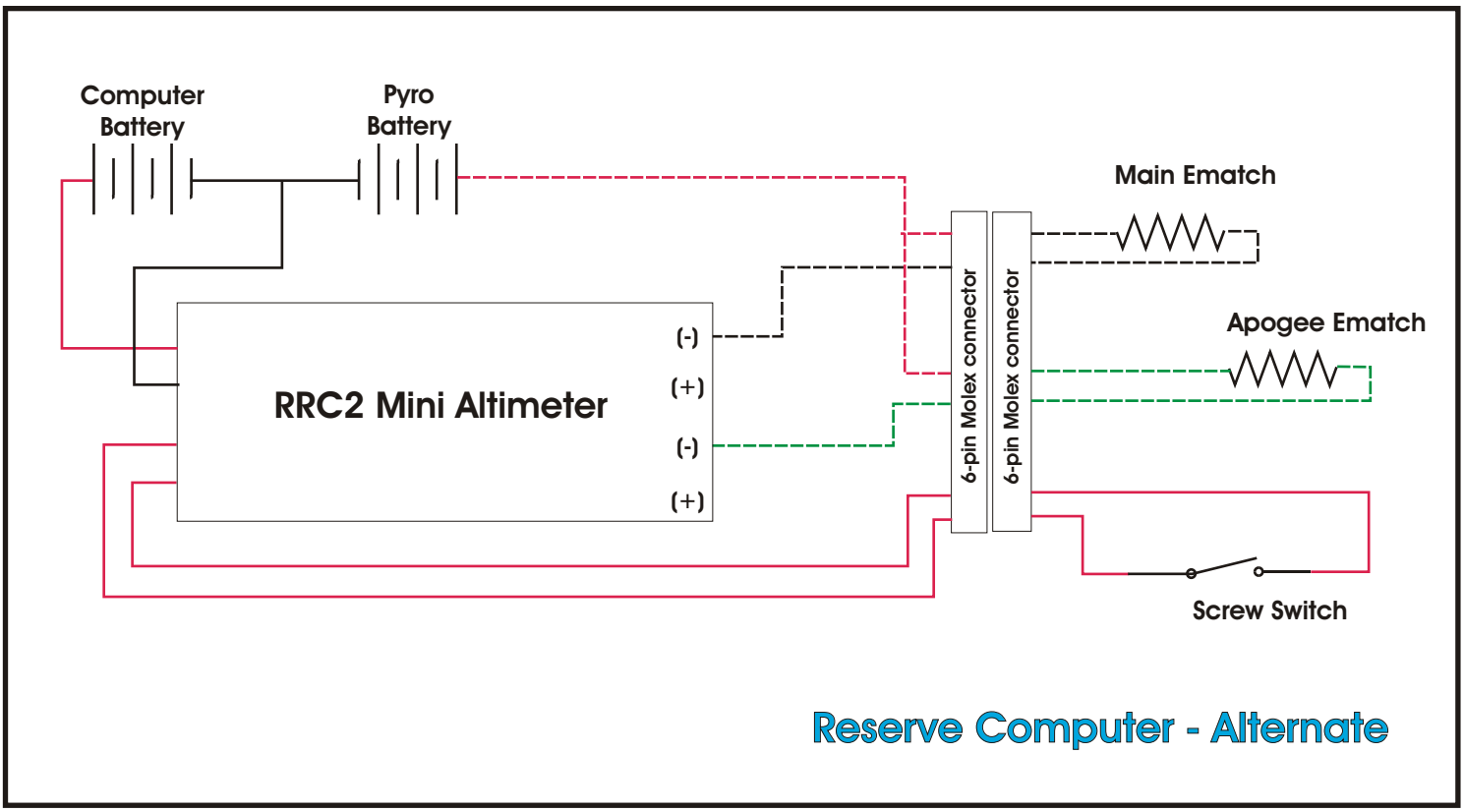

Flight testing of the electronics package intended for this flight revealed problems, either of my doing or as the result of a fault in the altimeter itself. The altimeter in question (a new ARTS2) has been submitted to the manufacturer for evaluation. I am hoping for its return in time for my certification flight, but in the event that does not occur I have set up an altimeter board to use the MissileWorks RRC2 Mini as a replacement.

I have flown these altimeters as follows:

Gwiz MC	17 flights
ARTS2	2 flights
RRC2	2 flights

I have flown the Gwiz and the ARTS2 together as redundant systems. I have only flown the RRC2 as a stand-alone device.

Doctor Fill - Recovery Chain

The recovery chain in this rocket is quite straight forward, and broken into two major sections. The 50 foot long aft recovery riser, which is attached to the motor mount / booster at two points, is made of 5/8" tubular Kevlar, with loops formed by threading the material back through itself (so-called DeHate loops). The riser's rated strength is ~5500 pounds. Near its' fore end there is a sewn loop for drogue attachments, and a parachute sleeve made of Aramid cloth protects the drogue chute from ejection gases.

The upper end of the riser attaches to the Ebay with a 3/8" screw link. The attachment through the Ebay is formed of a section of ½"all-thread with heavy duty eye nuts attached to each end with standard JB Weld. The safe working load of this arrangement is ~1600 lbs, with an anticipated breaking strength of around 8000 lbs.

The 40' long fore riser attaches to the eye nut at the fore end of the Ebay, again with a 3/8" screw link. This riser then attaches directly to the parachute, again with a 3/8" screw link. The parachute, a Rocketman R18 Classic, is contained in a deployment bag that is controlled by the pilot chute attached to the nose cone. As the nose cone chute inflates, it pulls the deployment bag off the main chute. The two parts then return to the ground on separate parachutes. The nose cone is attached to the rocket with four #2-56 nylon screws serving as shear pins.

Overall the system measures 108' from the top of the parachute to the bottom of the motor mount.

I have not yet completed ground testing of the deployment charges, but initial calculations suggest the charges will be of reasonable size, with even the backup charges being three grams or less. This testing will be completed before any flight is attempted.

Deployment scheme:

Main Computer: Drogue at apogee, Main at 1000'
Reserve computer: Drogue at apogee+2 seconds, main at 800'

Doctor Fill Parts List

Item	Quantity	Material	Use	Source
7.5" x 48" LOC tubing	2	fiberglassed phenolic	Main Airframe	Performance Hobbies
7.5" 5:1 Ogive Nosecone	1	Fiberglass	Nose Cone	Performance Hobbies
3" x 36" PML	1	Phenolic	Motor Mount tube	Performance Hobbies
3" x 24" PML	1	Phenolic	Forward motor retention	Performance Hobbies
MMT reinforcement	1 yd	9 oz fiberglass cloth	Fin roots, CR junctions	Local Hobby Shop
Coupler Reinforcement	1 yd	2-oz fiberglass cloth	Exterior of couplers, to tighten fit	Local Hobby Shop
Motor retainer reinforcement	24"	2" carbon fiber sleeving	Reinforcement	Aerosleeves
7.5" x 3" x 1/2" Centering Rings	4	9-ply birch plywood	Motor Mount	Performance Hobbies
7.5" x 15" coupler	2	Phenolic	Airframe coupler, Ebay	Red Arrow Hobbies
7.5" x1/2" Cutom Bulkhead	2	9-ply birch pywood	Ebay structure	Red Arrow Hobbies
3"x12" coupler tube	2	Phenolic	Altimeter Bays	Red Arrow Hobbies
1/2" Fin Stock	3	10-ply birch plywood, laminated from 1/4" sheets	Fins	Red Arrow Hobbies
5/16" U-Bolt	3	Steel	Recovery harness mounting point	Fastenal
12" x 1/2" All-thread	1	Steel	Ebay carrier	Fastenal
1/2" Eye Nut	2	Forged Steel	Ebay recovery harness mounting point	Fastenal
#6-32 Screws	12	Steel	Attaching Airframe sections	Fastenal
Thrust collar	1	Aluminum	Transfer thrust to airframe	Cut-down Slimline retainer
5/16" x 2" Socket head bolts	2	Steel	Motor Retention	Fastenal
7.5" x 1/2" Bulkhead	1	9-ply birch plywood	Nosecone base plate	Performance Hobbies
Misc Hardware		Steel / Aluminum	Ebay assembly	
Electronic Sleds	2	3/16" 5-ply plywood	Mount altimeters	

Parts List - Recovery Chain

Item	Quantity	Material	Source	Comments
Lower Recovery Harness	50'	5/8" tubular Kevlar	Performance Hobbies	Two attachment points at lower end
Upper Recovery Harness	40'	5/8" tubular Kevlar	Performance Hobbies	
3/8" QuickLinks	3	Steel		
5/16" QuickLink	3	Steel		Used at lower end of harness
54" Drogue	1	1.9oz ripstop nylon	PerfectFlight	
30" Pilot Chute	1	1.9oz ripstop nylon	PerfectFlight	
R-18 Main Chute	1	1.1 oz ripstop nylon	RocketMan	18' four mainline chute
Deployment Bag	2	Aramid Cloth	Pratt Hobbies	Home made deployment bags/ sleeves on all chutes

Doctor Fill - Simulation results

Engine selection

[M2281-None]

Simulation control parameters

- Flight resolution: 800.000000 samples/second
- Descent resolution: 1.000000 samples/second
- Method: Explicit Euler
- End the simulation when the rocket reaches the ground.

Launch conditions

- Altitude: 100.00000 Ft.
- Relative humidity: 65.000 %
- Temperature: 85.000 Deg. F
- Pressure: 0.00 Mi.

  Wind speed model: Slightly breezy (8-14 MPH)
  - Low wind speed: 8.0000 MPH
  - High wind speed: 14.9000 MPH

  Wind turbulence: Some variablility (0.04)
  - Frequency: 0.040000 rad/second
- Wind starts at altitude: 0.08333 Ft.
- Launch guide angle: 0.000 Deg.
- Latitude: 42.000 Degrees

Launch guide data:

- Launch guide length: 144.0000 In.
- Velocity at launch guide departure: 99.2087 ft/s
- The launch guide was cleared at : 0.290 Seconds
- User specified minimum velocity for stable flight: 44.9928 ft/s
- Minimum velocity for stable flight reached at: 54.2154 In.

Max data values:

- Maximum acceleration:Vertical (y): 23.181 geeHorizontal (x): 0.057 geeMagnitude: 23.181 gee
- Maximum velocity:Vertical (y): 613.2316 ft/s, Horizontal (x): 20.3680 ft/s, Magnitude: 614.6949 ft/s
- Maximum range from launch site: 617.65420 Ft.
- Maximum altitude: 5226.31234 Ft.

Recovery system data

- P: RocketMan R18C Deployed at : 74.103 Seconds
- Velocity at deployment: 77.4925 ft/s
- Altitude at deployment: 799.96063 Ft.
- Range at deployment: 429.44882 Ft.
- P: Drogue Chute Deployed at : 17.800 Seconds
- Velocity at deployment: 31.5141 ft/s
- Altitude at deployment: 5226.31234 Ft.
- Range at deployment: -439.56037 Ft.

Time data

- Time to burnout: 2.405 Sec.
- Time to apogee: 17.800 Sec.
- Optimal ejection delay: 15.395 Sec.
- Time to wind shear: 0.030 Sec.

Landing data

- Successful landing

Doctor Fill

Preflight Checklist

- ☐ Verify presence of all components and necessary tools.
- ☐ Assemble motor per manufacturer's instructions.
- ☐ Attach recovery riser to motor mount (2 points, 5/16" screw links)
- ☐ Install assembled motor in airframe. Attach motor retainer with two 5/16 -18 x 2" bolts.
- ☐ Install airframe extension on booster section using six #8-32 x ½" flat-head screws.
- ☐ Attach flight computers to electronics sleds. Connect wires per code on sled.
- ☐ Attach 6-pin Molex connectors and install computers in carrier
- ☐ Cycle altimeters on then off to ensure proper connection.
- ☐ Seal up altimeter carriers with proper covers and two (each) #6-32 x 1" button head screws.
- ☐ Install kevlar pad over top of ebay.
- ☐ Install apogee charges, sized per ground testing. Use electrical tape to firmly hold prepared charges in charge cups.
- ☐ **USE CAUTION:** Cycle each altimeter on then off to test continuity **LIVE CHARGES**
  Beep Patterns
  Gwiz MC: Long - 2 short - 1 short - 2 short
  ARTS2 & RRC2: 1 short
- ☐ Install main deployment charges. Use electrical tape to hold prepared charges in charge cups.
- ☐ **USE CAUTION:** Cycle each altimeter on then off to test continuity **:LIVE CHARGES**
  Beep Patterns
  Gwiz MC: Long - 2 short - 1 short - 1 short
  ARTS2 & RRC2: 3 short
- ☐ Attach main recovery riser to electronics bay with ⅜" screw link
- ☐ Attach forward airframe section to electronics bay with four #8-32 x ¾" flat-head screws.
- ☐ Pack main chute into deployment bag.
- ☐ Connect chute, main recovery riser, and nosecone riser with ⅜" screw link
- ☐ Carefully pack recovery riser and chute into parachute compartment.
- ☐ Install nose cone with four #2-56 nylon screws as shear pins.
- ☐ Attach riser from motor mount to electronics bay using ⅜" screw link
- ☐ Pack drogue chute into deployment sleeve.
- ☐ Carefully pack drogue chute and recovery riser into apogee compartment.
- ☐ Install forward airframe section.

AT THE PAD

- ☐ Ensure GSE control switch is in the SAFE position.
- ☐ Attach assembled rocket to rail.
- ☐ Connect fill tubes to proper fill hose (2 line fill hose x ¼" compression fitting)
- ☐ Connect vent hose to vent restrictor.
- ☐ 'Blip Test' pressure connections. Dump all pressure.
- ☐ Connect igniter leads. Verify continuity.
- ☐ **USE CAUTION:** Arm electronics, verify beep patterns. **:LIVE CHARGES**
  Beep Patterns
  Gwiz MC: Long - 2 short - 1 short - 1 short
  ARTS2 & RRC2: 3 short
- ☐ Move GSE switch to ARMED position
- ☐ Retreat to safe distance. Fill and fire per Standard Operating Procedure.